Cambridge International AS & A Level

CANDIDATE NAME	
CENTRE NUMBER	
CANDIDATE NUMBER	

COMPUTER SCIENCE **9618/13**

Paper 1 Theory Fundamentals **October/November 2024**

1 hour 30 minutes

You must answer on the question paper.

No additional materials are needed.

INSTRUCTIONS

- Answer **all** questions.
- Use a black or dark blue pen.
- Write your name, centre number and candidate number in the boxes at the top of the page.
- Write your answer to each question in the space provided.
- Do **not** use an erasable pen or correction fluid.
- Do **not** write on any bar codes.
- You may use an HB pencil for any diagrams, graphs or rough working.
- Calculators must **not** be used in this paper.

INFORMATION

- The total mark for this paper is 75.
- The number of marks for each question or part question is shown in brackets [ ].
- No marks will be awarded for using brand names of software packages or hardware.

This document has **20** pages. Any blank pages are indicated.

© UCLES 2024

1 **(a)** Describe the operation of a 2-input XOR gate.

....

.... [1]

(b) Write the logic expression for the following logic circuit.

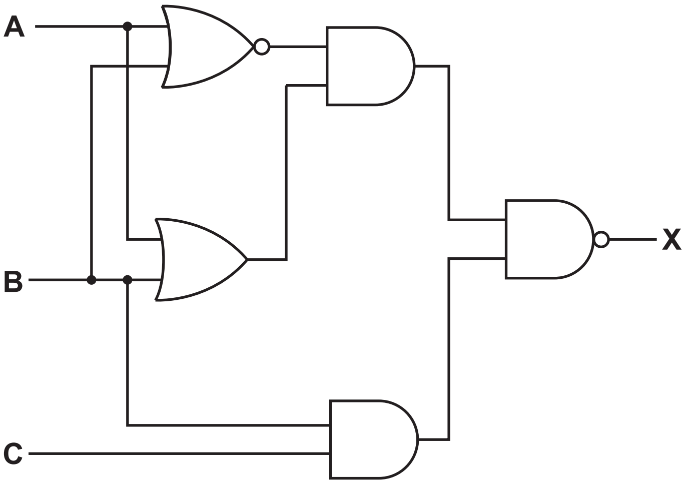

X = ...

.... [2]

(c) Draw the logic circuit for the logic expression:

X = ((NOT **A** AND (**B** AND **C**)) OR (**B** NAND **C**)) AND NOT **A**

[2]

2 A memory buffer uses Dynamic RAM (DRAM).

(a) Identify **two** differences between DRAM and Static RAM (SRAM).

Difference 1 ....

....

....

Difference 2 ....

....

....

[2]

(b) Explain how a memory buffer is used when a computer is transferring data to its magnetic hard disk drive.

....

....

....

....

....

....

....

.... [4]

3 A car has an automatic braking system.

A sensor is used to measure the distance to objects that are in front of the car.

The car automatically brakes if an object is too close to the front of the car or the distance between the car and the object is decreasing too quickly. The closer the object is to the front of the car, the harder the car brakes so that the car slows down more quickly.

Explain the reasons why the automatic braking system of the car is a control system.

....

....

....

....

....

.... [3]

4 A company makes ice cream and sells it to shops.

The ice cream is made in batches: a large quantity of one type and flavour of ice cream that is then split into smaller quantities for sale.

The company's owner has designed a relational database, `ICECREAM`, to store data about their ice cream and customers.

Some of the tables in the database are given. The database is not normalised.

`BATCH(`<u>`BatchID`</u>`, Type, Flavour, Size, SellingPrice, EndDate)`

`CUSTOMER(`<u>`CustomerID`</u>`, CompanyName, EmailAddress, TelephoneNumber)`

`SALE(`<u>`SaleID`</u>`, BatchID, CustomerID, Quantity, Date)`

(a) Identify **two** foreign keys in the table `SALE` **and** the table that each foreign key references.

Foreign key 1 ....

Table name 1 ....

Foreign key 2 ....

Table name 2 ....

[2]

(b) Write an SQL script to return the total quantity of ice cream sold to the customer with the ID of 0034E in the year 2023.

....

....

....

....

....

.... [3]

(c) The table definition for `BATCH` is repeated here:

`BATCH(BatchID, Type, Flavour, Size, SellingPrice, EndDate)`

Sample data for the table `BATCH` is given:

BatchID	**Type**	**Flavour**	**Size**	**SellingPrice**	**EndDate**
KIV12	Plain	Vanilla	1	2.20	12/12/2024
RIC14	Plain	Chocolate	0.5	1.80	12/12/2024
TYL1	Non-dairy	Lemon	0.5	2.10	01/02/2025
FYV2	Non-dairy	Vanilla	0.25	1.50	02/02/2025
BIV13	Plain	Vanilla	1	2.20	02/02/2024

(i) Write an SQL script to define the table `BATCH`.

Include constraints (restrictions) on the data that can be entered into each field where appropriate.

....

....

....

....

....

....

....

....

....

.... [5]

(ii) The table `BATCH` is not normalised.

Normalise the database table `BATCH`.

Write the table definitions for your new tables.

Identify any primary and foreign keys in your tables.

Do **not** change or include the tables `CUSTOMER` and `SALE`.

....

....

....

....

....

....

....

.... [4]

(d) Complete the following table by defining each database term.

Database term	**Definition**
Entity	....
Attribute	....

[2]

(e) A Database Management System (DBMS) supports data integrity.

Explain how a DBMS supports data integrity.

....

....

....

....

....

.... [3]

5 A computer programmer writes programs that are distributed with a software licence.

(a) Complete the table by writing the type of software licence each statement describes.

Statement	**Software licence**
A fee is charged for the software. The source code cannot be accessed. Users do **not** get a free trial.	....
Users can try the software before buying it. Users may **not** be able to access all features during the trial.	....
Software is usually free of charge. Users can access the source code and alter the program to their needs.	....

[3]

(b) Explain the reasons why it is important for the computer programmer to join a professional ethical body.

....

....

....

....

....

.... [3]

6 A computer system stores text, images and sound.

(a) A character set is used to represent characters in a computer.

Identify **and** describe **one** character set.

Character set ....

Description ....

.... [2]

(b) The colour of each pixel in a bitmapped image is represented by 8 bits.

(i) State the largest number of different colours that can be represented by 8 bits.

.... [1]

(ii) State **one** drawback of increasing the number of bits that represents each pixel in the bitmap image.

....

.... [1]

(iii) A bitmap image can be compressed using lossy compression.

Explain the reasons why lossy compression is often suitable for a bitmap image.

....

....

....

.... [2]

(c) **(i)** Explain how an analogue sound wave is converted into digital data.

....

....

....

.... [2]

(ii) Describe **one** method of compressing a sound file using lossy compression.

....

....

....

.... [2]

7 The following table shows part of the instruction set for a processor. The processor has two registers, the Accumulator (ACC) and the Index Register (IX).

Instruction		Explanation
Opcode	**Operand**	
`LDM`	`#n`	Immediate addressing. Load the number n to ACC
`LDD`	`<address>`	Direct addressing. Load the contents of the location at the given address to ACC
`LDI`	`<address>`	Indirect addressing. The address to be used is at the given address. Load the contents of this second address to ACC
`LDX`	`<address>`	Indexed addressing. Form the address from <address> + the contents of the index register. Copy the contents of this calculated address to ACC
`LDR`	`#n`	Immediate addressing. Load the number n to IX
`ADD`	`#n/Bn/&n`	Add the number n to the ACC
`ADD`	`<address>`	Add the contents of the given address to the ACC
`SUB`	`#n/Bn/&n`	Subtract the number n from the ACC
`SUB`	`<address>`	Subtract the contents of the given address from the ACC
`INC`	`<register>`	Add 1 to the contents of the register (ACC or IX)
`DEC`	`<register>`	Subtract 1 from the contents of the register (ACC or IX)

<address> can be an absolute or a symbolic address
# denotes a denary number, e.g. #123
B denotes a binary number, e.g. B01001010
& denotes a hexadecimal number, e.g. &4A

(a) The current contents of memory are shown:

Address	Data
50	54
51	55
52	50
53	52
54	100
55	25
56	50

The current contents of the ACC and IX are shown:

ACC	50
IX	45

Complete the table by writing the content of the ACC after each program has run.

	Instructions	ACC content

1	`LDD 50`
	`ADD #4`
	`ADD 54`	

2	`LDI 53`
	`DEC ACC`
	`ADD 56`	

3	`LDM #55` `SUB #5`	

[3]

(b) The instruction set also includes these bit manipulation instructions:

Instruction		Explanation
Opcode	**Operand**	
`AND`	`#n/Bn/&n`	Bitwise AND operation of the contents of ACC with the operand
`AND`	`<address>`	Bitwise AND operation of the contents of ACC with the contents of <address>
`XOR`	`#n/Bn/&n`	Bitwise XOR operation of the contents of ACC with the operand
`XOR`	`<address>`	Bitwise XOR operation of the contents of ACC with the contents of <address>
`OR`	`#n/Bn/&n`	Bitwise OR operation of the contents of ACC with the operand
`OR`	`<address>`	Bitwise OR operation of the contents of ACC with the contents of <address>
<address> can be an absolute or a symbolic address # denotes a denary number, e.g. #123 B denotes a binary number, e.g. B01001010 & denotes a hexadecimal number, e.g. &4A		

Explain how bit manipulation can be used to clear the data in an 8-bit register.

Write the bit manipulation instruction that will be used.

Explanation ....

....

....

....

....

Instruction ....
[3]

8 **(a)** Convert the hexadecimal number 1FAB into denary.

Working ....

....

....

Denary value .... [1]

(b) Explain how to convert the two's complement integer 10011111 into denary. Give the denary value after conversion.

Explanation ....

....

....

....

....

Denary value ....
[3]

(c) Describe the difference between a right logical binary shift and a right arithmetic binary shift.

....

....

....

.... [2]

9 A computer is connected to a Local Area Network (LAN) that connects to a Wide Area Network (WAN).

(a) Describe the characteristics of a WAN.

....

....

....

.... [2]

(b) Copper cable can be used to transmit data in a network.

Complete the table by identifying **and** describing **two other** transmission media that can be used to transfer data in the WAN.

Transmission medium	**Description**
....	....
....	....

[4]

(c) The computer on the LAN is used for real-time video conferences, where people connected to the internet communicate in real-time using video and audio.

Explain how bit streaming is used in a real-time video conference.

....

....

....

....

....

....

....

.... [4]

(d) The LAN has a router. The router has a public IP address and a private IP address.

(i) State the purpose of a public IP address and a private IP address.

Public IP address ....

....

Private IP address ....

....

[2]

(ii) The LAN uses subnetting.

Describe the purpose of subnetting in a network.

....

....

....

.... [2]

BLANK PAGE

BLANK PAGE

© UCLES 2024

BLANK PAGE

Permission to reproduce items where third-party owned material protected by copyright is included has been sought and cleared where possible. Every reasonable effort has been made by the publisher (UCLES) to trace copyright holders, but if any items requiring clearance have unwittingly been included, the publisher will be pleased to make amends at the earliest possible opportunity.

To avoid the issue of disclosure of answer-related information to candidates, all copyright acknowledgements are reproduced online in the Cambridge Assessment International Education Copyright Acknowledgements Booklet. This is produced for each series of examinations and is freely available to download at www.cambridgeinternational.org after the live examination series.

Cambridge Assessment International Education is part of Cambridge Assessment. Cambridge Assessment is the brand name of the University of Cambridge Local Examinations Syndicate (UCLES), which is a department of the University of Cambridge.

© UCLES 2024