UNIVERSITY OF CAMBRIDGE INTERNATIONAL EXAMINATIONS
General Certificate of Education
Advanced Subsidiary Level and Advanced Level

| | |
|---|---|
| CANDIDATE NAME | |
| CENTRE NUMBER | |
| CANDIDATE NUMBER | |

*3479490363*

**PHYSICS** **9702/31**

Paper 3 Advanced Practical Skills 1 **May/June 2013**

**2 hours**

Candidates answer on the Question Paper.

Additional Materials: As listed in the Confidential Instructions.

**READ THESE INSTRUCTIONS FIRST**

Write your Centre number, candidate number and name on all work you hand in.
Write in dark blue or black pen.
You may use a pencil for any diagrams, graphs or rough working.
Do not use staples, paper clips, highlighters, glue or correction fluid.
DO **NOT** WRITE IN ANY BARCODES.

Answer **both** questions.
You will be allowed to work with the apparatus for a maximum of one hour for each question.
You are expected to record all your observations as soon as these observations are made, and to plan the presentation of the records so that it is not necessary to make a fair copy of them.
You are reminded of the need for good English and clear presentation in your answers.

Electronic calculators may be used.
You may lose marks if you do not show your working or if you do not use appropriate units.

Additional answer paper and graph paper should be used only if it becomes necessary to do so.

At the end of the examination, fasten all your work securely together.
The number of marks is given in brackets [ ] at the end of each question or part question.

| For Examiner's Use | |
|---|---|
| 1 | |
| 2 | |
| Total | |

bestexamhelp.com

This document consists of **12** printed pages.


© UCLES 2013

**You may not need to use all of the materials provided.**

*For Examiner's Use*

**1** In this experiment, you will investigate a system in equilibrium due to several turning forces.

**(a)** Measure and record the distance *L* between the two holes in the wooden strip as shown in Fig. 1.1.

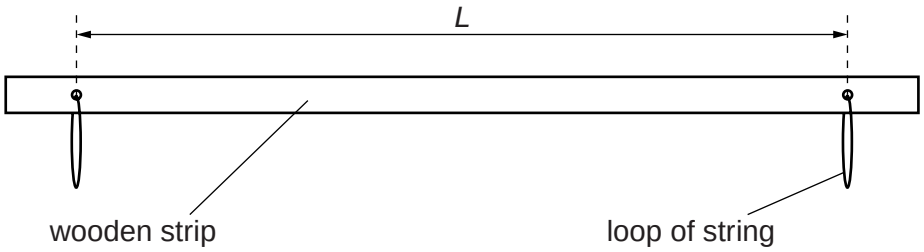


**Fig. 1.1**

*L* = ..... m [1]

**(b)** Write down the mass *M* given on the card.

*M* = ..... kg

**(c) (i)** Set up the apparatus as shown in Fig. 1.2, with mass $m$ = 0.040 kg.

For Examiner's Use

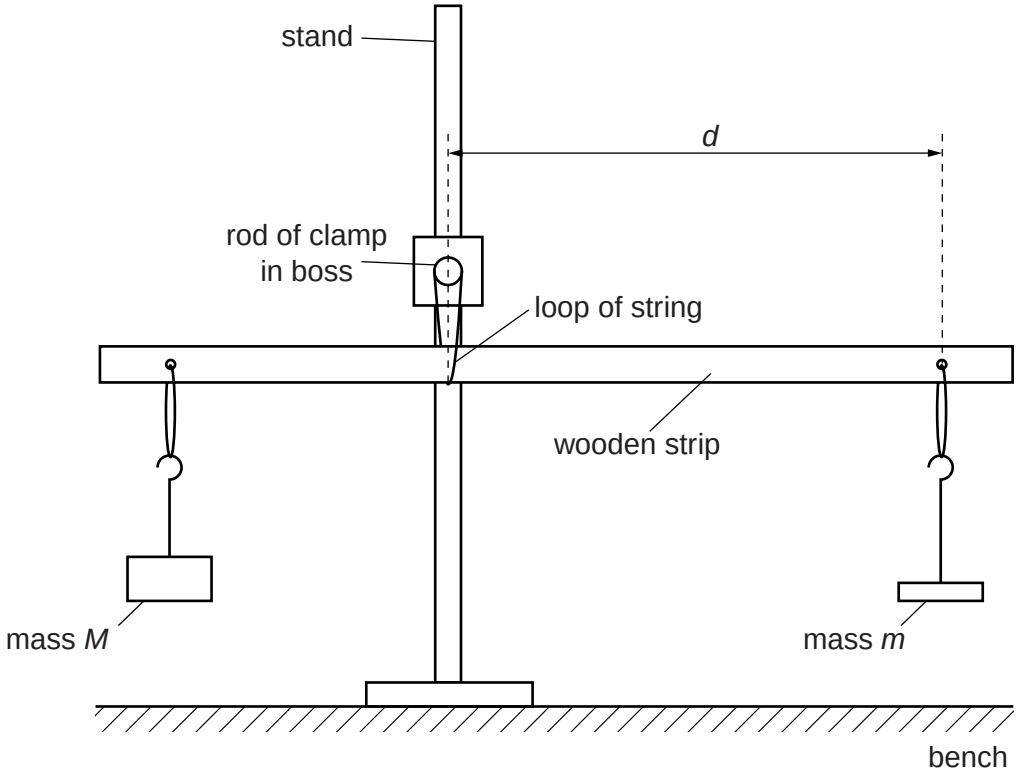


**Fig. 1.2**

**(ii)** Adjust the position of the wooden strip until it balances.

Measure and record the distance $d$, as shown in Fig. 1.2.

$d$ = ..... m [1]

**(d)** Vary $m$ and repeat **(c)(ii)** until you have six sets of readings of $m$ and $d$.

Include values of $\frac{1}{d}$ in your table.

For Examiner's Use

[10]

**(e)** **(i)** Plot a graph of $\frac{1}{d}$ on the $y$-axis against $m$ on the $x$-axis. [3]

**(ii)** Draw the straight line of best fit. [1]

**(iii)** Determine the gradient and $y$-intercept of this line.

gradient = .....

$y$-intercept = .....

[2]

© UCLES 2013

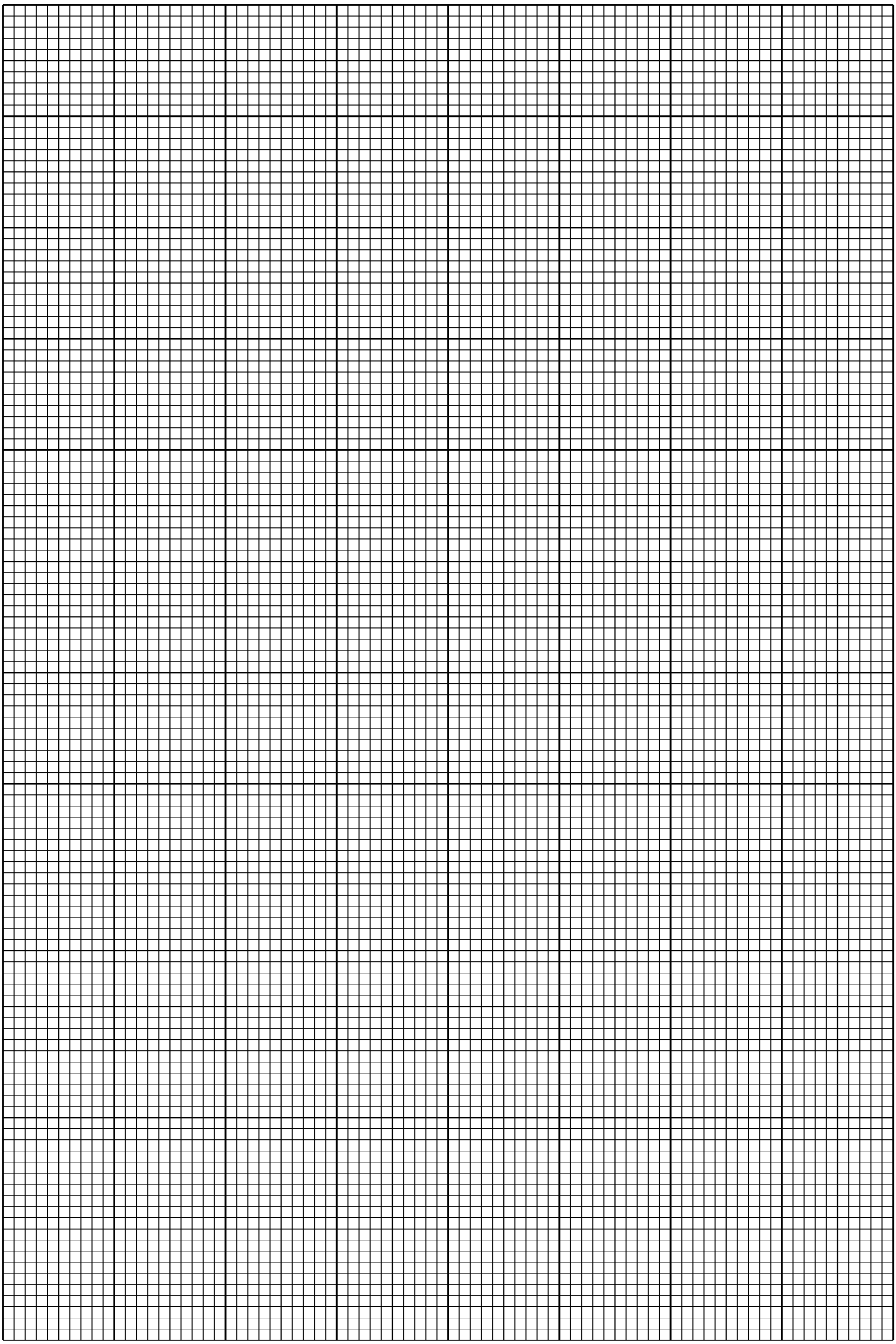

*For Examiner's Use*

**(f)** The quantities $d$ and $m$ are related by the equation

$$\frac{1}{d} = Pm + Q$$

where $P$ and $Q$ are constants.

Using your answers in **(e)(iii)**, determine the values of $P$ and $Q$.
Give appropriate units.

*For Examiner's Use*

$P$ = .....

$Q$ = .....
[1]

**(g)** The constant $P$ is related to $L$ and $M$ by

$$P = \frac{1}{kML}$$

where $k$ is a constant.

Using your answers in **(a)**, **(b)** and **(f)**, calculate a value for $k$.
You need not include units for $k$.

$k$ = .....[1]

© UCLES 2013

**You may not need to use all of the materials provided.**

*For Examiner's Use*

**2** In this experiment, you will investigate the motion of a wooden rod supported by a string.

**(a) (i)** Set up the apparatus as shown in Fig. 2.1 with height *h* approximately 40 cm.

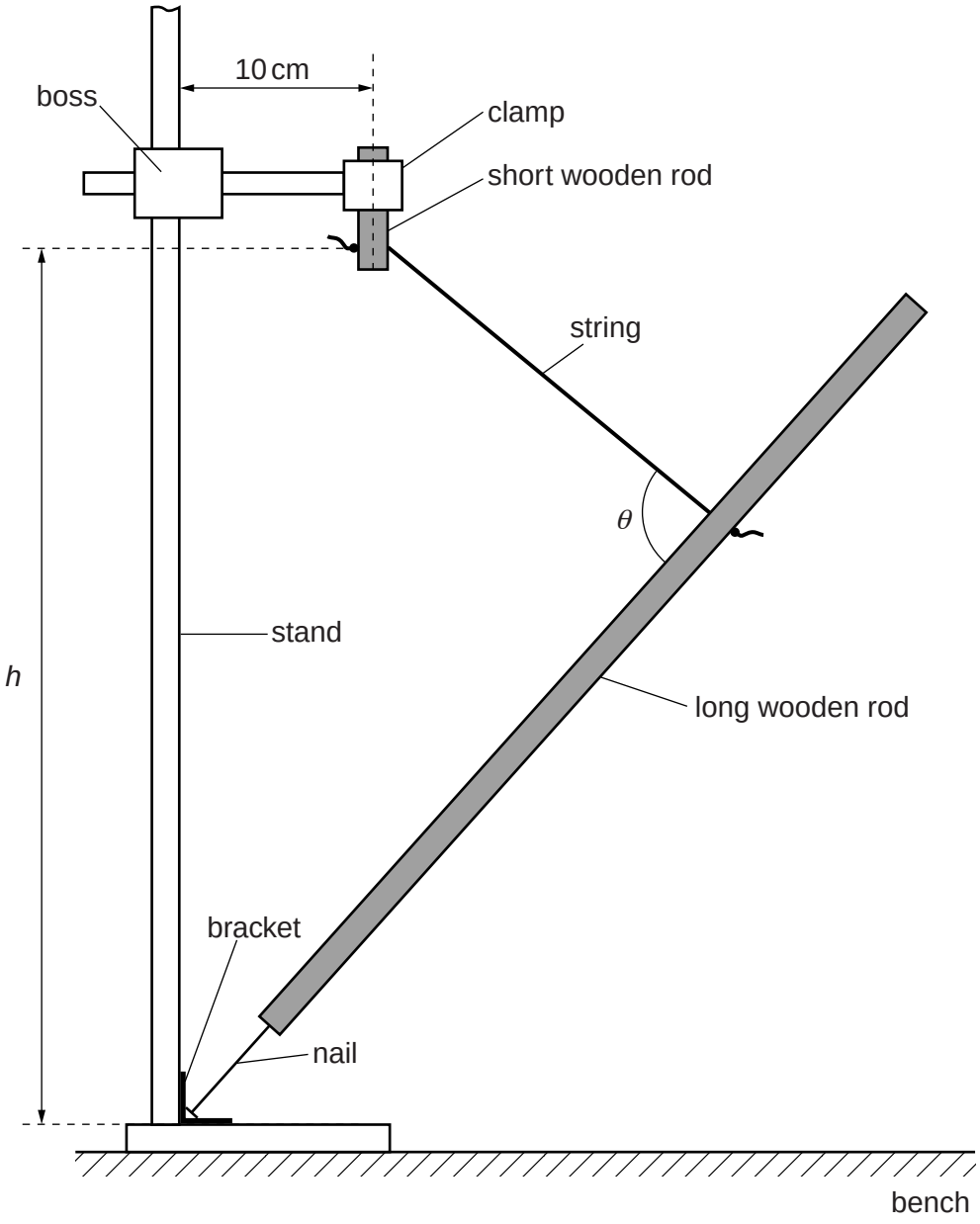


**Fig. 2.1**

The short wooden rod should be held firmly in the clamp.

Place the bracket on the base of the stand and rest the head of the nail in the centre of the bracket.

**(ii)** Measure and record the angle $\theta$ between the string and the long wooden rod as shown in Fig. 2.1.

*For Examiner's Use*

$\theta$ = .....[2]

**(iii)** Estimate the percentage uncertainty in your value of $\theta$.

percentage uncertainty = .....[1]

**(iv)** Calculate sin $\theta$.

sin $\theta$ = .....[1]

© UCLES 2013

**(b)** Gently displace the end of the long wooden rod to the left as shown in Fig. 2.2 (top view).

For Examiner's Use

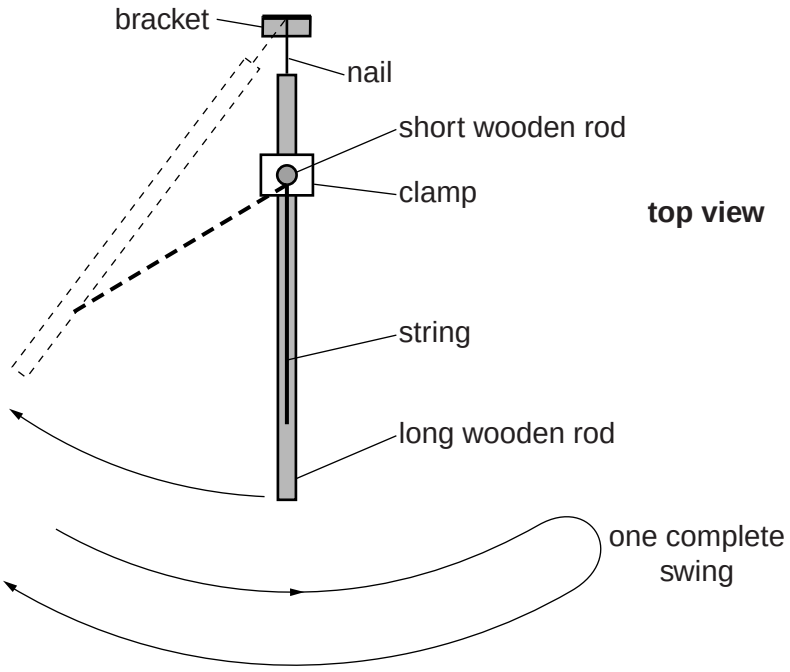


**Fig. 2.2**

Release the rod and watch the movement.
The rod will move to the right and back towards the left, completing a swing.
The time taken for one complete swing is *T*.
By timing several of these complete swings, determine an accurate value for *T*.

*T* = .....[2]

**(c) (i)** Reduce $h$ to approximately 20 cm.

**(ii)** Repeat **(a)(ii)**, **(a)(iv)** and **(b)**.

*For Examiner's Use*

$\theta$ = .....

sin $\theta$ = .....

$T$ = .....

[3]

**(d)** It is suggested that the relationship between $T$ and $\theta$ is

$$T^2 = k \sin\theta$$

where $k$ is a constant.

*For Examiner's Use*

**(i)** Using your data, calculate two values of $k$.

first value of $k$ = .....

second value of $k$ = .....

[1]

**(ii)** Justify the number of significant figures that you have given for your values of $k$.

.....

.....

.....[1]

**(iii)** Explain whether your results in **(d)(i)** support the suggested relationship.

.....

.....

.....

.....[1]

**(e) (i)** Describe four sources of uncertainty or limitations of the procedure for this experiment.

*For Examiner's Use*

1. .....

.....

2. .....

.....

3. .....

.....

4. .....

.....

[4]

**(ii)** Describe four improvements that could be made to this experiment. You may suggest the use of other apparatus or different procedures.

1. .....

.....

2. .....

.....

3. .....

.....

4. .....

.....

[4]

Permission to reproduce items where third-party owned material protected by copyright is included has been sought and cleared where possible. Every reasonable effort has been made by the publisher (UCLES) to trace copyright holders, but if any items requiring clearance have unwittingly been included, the publisher will be pleased to make amends at the earliest possible opportunity.

University of Cambridge International Examinations is part of the Cambridge Assessment Group. Cambridge Assessment is the brand name of University of Cambridge Local Examinations Syndicate (UCLES), which is itself a department of the University of Cambridge.